Ergonomic

/ State-of-the-art design makes a clear footwell with wellplaced pedals which give plenty of room for large feet space and help the driver's comfort working.
/ The simple, concise instrument panel minimizes confusion but gives the key warnings to operator.
/ Hydraulic levers can be mounted beside the battery or on the scuttle, giving easy access from either side. The conventional cabin layout makes the inexperienced operator work easily without time-consuming training.
/ Adjustable steering wheel and seat make the operator in comfortable working position.

Maneuverability

/ Drive to the rear steering wheel gives safe truck operation in confined spaces. The turning angle of rear wheel is upto 90 degree, compared with the same load capacity 4 pivot trucks, the turning radius is smaller about 400 to 450mm.
/ Driving speed is automatically reduction during cornering.

Reliability

/ AC motor is the simple brushless motor, less maintenance and better suitability for wet & explosive conditions.
/ Maintenance is easy and low-cost.

Side battery change

/ 24V battery is ideal for two or three shifts requirements, and side battery change is a perfect option to change the batteries quickly.

HANGCHA

Hangcha Europe GmbH
Mariechen-Graulich-Straße 12a,
65439 Flörsheim am Main,
Germany

Tel: 0049-61453769188
E-mail: admin@hangchaeurope.com

Mob: 0049-16096548808 (Thomas Dittrich)
E-mail: thomas.dittrich@hangchaeurope.com
Zip Code Area (1,2,3,4,5,6,7)

Mob: 0049-1605272481 (Jens Aßmuth)
E-mail: jens.assmuth@hangchaeurope.com
Zip Code Area (0,8,9)

www.hangchaeurope.com

Follow us on Instagram

Follow us on Facebook

Follow us on YouTube

Download "Hangcha Forklift" App

ISO14001
ISO14001:2015

ISO9001
ISO9001:2015

HANGCHA trucks conform to the European Safety Requirements.

2022 VERSION 2/COPYRIGHT 2022/12

HANGCHA GROUP CO., LTD. reserves the right to make any changes without notice concerning colors, equipment, or specifications detailed in this brochure, or to discontinue individual models. The colors of trucks, delivered may differ slightly from those in brochures.

A series 3-pivot Rear Drive Electric Forklift

with capacities of 1,500kg

The World of Hangcha

HANGCHA

A series 3-pivot Rear Drive Electric Forklift

A series 1.5t rear-wheel driving three pivot electric forklift truck is very suitable for operating in limited space, with small turning radius, which is the ideal forklift truck in store, supermarket and warehouse, etc.

Standard specification

/ Solid tyre
/ Emergency disconnect switch
/ Full suspension seat
/ Drive,lift, steering controlled
/ Self-diagnose system
/ 2 spools valves
/ 3m wide view mast
/ Adjustable steering wheel
/ Multi-function LCD display and trucklighting system
/ Rear view mirror
/ Side battery change

Options

/ Drive wheel with Pneu tyres
/ 3 or 4 spools control valves
/ 4.3-6m full free triplex mast
/ 2.5-4.5m full free duplex mast
/ Different length forks
/ Attachments
/ Different load backrest
/ Tool box

1.5t Three-wheel Forklift Specification

Distinguishing mark	1.1	Manufacturer		HANGCHA GROUP CO.,LTD.
	1.2	Manufacturer's model designation		CPDS15-AHC2
	1.3	Drive: electric (battery or mains), diesel, petrol, fuel gas		Electric
	1.4	Operator type: hand, pedestrian, standing, seated, order-picker		Seated
	1.5	Load capacity	Q /kg	1500
	1.6	Load centre distance	c /mm	500
	1.8	Load distance , center of drive axle to fork	x /mm	365
	1.9	Wheelbase	y /mm	1220
Weight	2.1	Service weight with battery	kg	3000
	2.2	Axle loading with load, front/rear	kg	3930/570
	2.3	Axle loading, unladen front/rear	kg	1370/1630
Wheel & tyres	3.1	Tyres: solid rubber, superelastic, pneumatic, polyurethane		solid rubber
	3.2	Tyre size - front		18x7-8
	3.3	Tyre size - rear		200/50-10
	3.5	Wheel, number operator/load side (x=drive)		2/1x
	3.6	Tread , front	b_{10}/mm	835
	3.7	Tread , rear	b_{11}/mm	/
Dimensions	4.1	Tilt of mast/fork carriage forward/backward	α/β(°)	6/5
	4.2	Height,mast lowered	h_1/mm	1980
	4.3	Free lift	h_2/mm	155
	4.4	Lift	h_3/mm	3000
	4.5	Height, mast extended	h_4/mm	3955
	4.7	Height of overhead guard (cabin)	h_6/mm	2105
	4.8	Seat height/stand height	h_7/mm	940
	4.12	Coupling height	h_{10}/mm	500
	4.19	Overall length	l_1/mm	2785
	4.20	Length to face of forks	l_2/mm	1865
	4.21	Overall width	b_1/mm	990
	4.22	Fork thickness	s/e/l mm	35/100/920
	4.23	Fork carriage to DIN 15173 - class/form A or B		ISO II A
	4.24	Fork carriage width	b_3/mm	1000
	4.31	Ground clearance, with load, below mast	m_1/mm	100
	4.32	Ground clearance, centre of wheelbase	m_2/mm	100
	4.33	Aisle width for pallets 1000 x 1200 crossways	Ast/mm	3160
	4.34	Aisle width for pallets 800 x 1200 lengthways	Ast/mm	3285
	4.35	Turning radius	Wa/mm	1510
Performance	5.1	Travel speed, laden/unladen	km/h	9/9.5
	5.2	Lift speed laden	m/s	0.220/0.330
	5.3	Lowering speed laden	m/s	0.580/0.480
	5.6	Max. Drawbar pull, laden/unladen	N	6400/6300
	5.7	Gradeability, laden/unladen	%	7/9
	5.9	Acceleration time, laden/unladen (0-10m)	s	6.0/5.8
	5.10	Service brake		Hydraulic
Motors	6.1	Drive motor rating S2 60min.	kW	AC 4
	6.2	Lift motor rating S3 15%	kW	AC 8.6
	6.3	Battery equipment to DIN 43531/35/36 A, B, C, no		DIN 43535 A
	6.4	Battery voltage,nominal capacity(5h)	V/Ah	24/920
	6.5	Battery weight	kg	675
	6.6	Energy consumption acc. to VDI cycle	kWh/h	3.5
Other	9.1	Drive control		CURTIS AC
	10.1	Operating pressure for attachments	bar	145
	10.2	Oil volumefor attachments	l/min	16
	10.7	Sound pressure level at the driver´s seat	dB(A)	< 70

1.5t Three-wheel Forklift Mast Specification

Type	Mast fork height	Overall height			Free lift		Tilting range		Load capacity at 500mm
		Lowered	Extended		Extended		Forward	Backward	
			With backrest	Without backrest	With backrest	Without backrest			1.5t
	mm	mm	mm	mm	mm	mm	(°)	(°)	kg
Duplex mast	2700	1830	3655	3233	155	155	6	5	1500
	3000	1980	3955	3533	155	155	6	5	1500
	3300	2130	4255	3833	155	155	6	5	1500
	3500	2230	4455	4033	155	155	6	5	1500
	3600	2330	4555	4133	155	155	6	5	1500
	4000	2580	4955	4533	155	155	3.5	5	1500
	4300	2730	5255	4833	155	155	3.5	5	1400
	4500	2830	5455	5033	155	155	3.5	5	1300
Full free duplex mast	2500	1745	3445	3059	800	1186	6	5	1500
	2700	1845	3645	3259	900	1286	6	5	1500
	3000	1995	3945	3559	1050	1436	6	5	1500
	3300	2145	4245	3859	1200	1586	6	5	1500
	3500	2245	4445	4059	1300	1686	6	5	1500
	3600	2295	4545	4159	1350	1736	6	5	1500
	4000	2545	4945	4559	1600	1986	3.5	5	1500
Triplex full free mast	4000	1945	4955	4584	1000	1371	3.5	5	1500
	4300	2045	5255	4884	1100	1471	3.5	5	1400
	4500	2095	5455	5084	1150	1521	3.5	5	1300
	4700	2195	5655	5284	1250	1621	3.5	5	1250
	4800	2245	5755	5384	1300	1671	3.5	5	1200
	5000	2345	5955	5584	1400	1771	3.5	5	1150
	5500	2545	6455	6084	1600	1971	3.5	5	1050
	6000	2795	6955	6605	1850	2200	3.5	5	950
	6500	2995	7455	7105	2050	2400	3.5	5	750

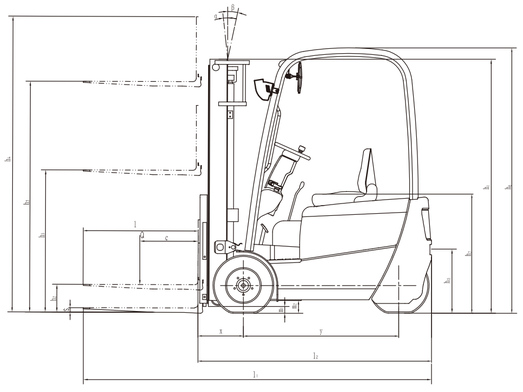

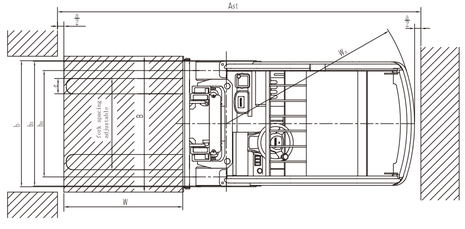
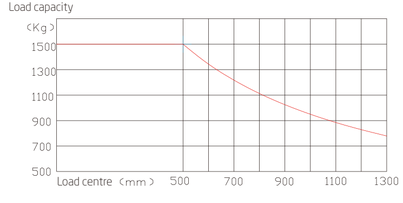
a=200 mm safety clearance
AST=a+Wa+√(W+x)²+(B/2)²