XEN Series

Self-propelled elevating work platform

OPERATION MANUAL

Models

65XEN

78XEN

80XEN

100XEN

120XEN

140XEN

160XEN

80XENS

100XENS

160XENS

HANGCHA GROUP CO., LTD.

September, 2022

Original instruction

Preface

Thank you very much for purchasing the XEN series Self-propelled elevating work platform of HANGCHA Group .

Before operating the machine, please carefully read and understand this manual content, understand and comply with the safety rules and instructions.Only trained and authorized personnel are allowed to operate the machine.this manual should be part of the machine and always kept together with the machine.

This manual is about the Self-propelled elevating work correct method of use, it will guide you how to make a safe operation and preventive maintenance; Also including the working principle and fault diagnosis of the machine, etc. In order to ensure safety, and give full play to the products you buy, the performance of the operators and maintenance personnel, be sure to read this manual before using.

As the improvements of products of our company, there may be some differences between this operation manual with your machine.

If you have any questions please keep touches with HANGCHA GROUP CO., LTD. sales department or let the agents know.

Contents

1 Notice for use 1
1.1 General 1
1.2 Operate as required 1
1.3 Operating conditions 1
1.4 Storage conditions 2
1.5 Obligations and responsibilities of equipment users 2
1.6 Install accessories or modify the machine 2
2 Introduction of XEN series 4
2.1 General 4
2.2 Functional description 5
2.3 Main part introduction 7
2.4 Display and control 8
2.5 Location of labels 9
2.6 Technical parameters 10
3 Safety instructions 15
3.1 Hazards classification 15
3.2 Symbol Description 15
3.3 Accident Notification 16
3.4 Electrocution Hazard 16
3.5 Tip-over Hazard 17
3.6 Working Environment Hazard 20
3.7 Unsafe Operation Hazard 21
3.8 Fall Hazard 22
3.9 Collision Hazard 23
3.10 Crushing Hazard 24
3.11 Explosion and Fire Hazard 24
3.12 Damaged Machine Hazard 24
3.13 Bodily Injury Hazard 25
3.14 Battery Hazard 25
3.15 Hydraulic System Hazard 26
3.16 Weldment and Grinding Safety 26
3.17 Lockout after Each Use 27
4 Lifting, Fixation and Traction 28
4.1 Lifting 28
4.2 Fixation 29
4.3 Traction 29
5 Pre-operation inspection 30
5.1 Machine inspection 30
5.2 Operating environment inspection 31
6 Function Tests 33
6.1 For ground control panel 33
6.2 For platform control panel 34

6.3 For platform control panel 35
7 Operating instructions 38
7.1 Emergency operation 38
7.2 Operate from the ground 39
7.3 Operate from the platform 39
7.4 Extend and fold the platform 40
7.5 Use of maintenance arm 41
7.6 Batteries and Charger 42
8 Maintenance 43
8.1 Maintenance instruction 43
8.2 Maintenance schedule 43
8.3 Maintenance inspection report 44

1 Notice for use

1.1 General

The Self-propelled elevating work platform described in this manual is only for lifting people, their working tools and materials to the specified height.

It must be used, operated and maintained according to the information in this manual. Any other uses are outside the design envelope and can lead to injury to persons or damage to equipment and property.

1.2 Operate as required

Ensure before operation：

★You have understood and practiced the rules for safe operation of the machine in this manual.

——Avoid dangerous situations.

——Always perform a pre-operational check.

——Always perform pre-operational functional tests.

——Check the Workplace.

——Use the machine only according to its design intent.

★Read, understand and comply with manufacturer's instructions and safety rules, operating manuals and machine labels.

★Read, understand and follow user safety rules and workplace regulations.

★Read, understand and comply with all applicable government regulations.

★You have been properly trained to operate the machine safely.

1.3 Operating conditions

★The operating ground should be firm and flat, and the ground should not sink during the operation.

★The ambient temperature is -20~40℃.

★The ambient relative humidity should not be greater than 90%(temperature 20℃).

★The altitudes should not exceed 1000m.

★The wind speed should not be greater than 12.5m/s.

★The permissible fluctuation of the supply voltage is 10%.

1.4 Storage conditions

★The machine should be stored in the environment free of rain, sun and corrosive gas.

★When the machine is stored, it should be placed in the lowest position and placed on a solid ground, keep the machine level. If the walking wheel is an air-filled tire, the wheel should be fragmented to the ground.

★After long term (more than one month) out of use, inspection, repair and maintenance should be carried out according to the operation manual before use.

1.5 Obligations and responsibilities of equipment users

In the operating instructions, "equipment user" refers to any natural or legal person who directly uses or appoints others to use the Self-propelled elevating work platform. In special cases such as leasing and leasing, the "equipment user" represents the party who undertakes the specified operation obligations according to the contract terms between the owner and the user of the equipment.

The user of the equipment must ensure that the Self-propelled elevating work platform is only used for the specified purpose, and eliminate the danger that may endanger the user's life and health or that of a third party. In addition, the user of the equipment must strictly abide by the accident prevention regulations, other safety technical regulations, and the operation, maintenance and repair rules of the equipment. The user of the equipment must ensure that all operators carefully read and fully understand the contents of the operation instructions.

If this operating instruction is not followed, the quality assurance of our company will be invalid automatically. Without the permission of the company, if the customer or the third party carries out non-standard operation on the equipment without the permission of the company, the company will not be responsible for the losses arising therefrom.

1.6 Install accessories or modify the machine

Without authorization by the manufacturer, it is not allowed to modify the machine privately.

The mounting or installation of any attachments which will interfere with, or supplement, the functions of the machine is permitted only after written approval by the manufacturer has been obtained. If necessary, the approval of local authorities has to be obtained.

Without the prior written approval of the original manufacturer, its authorized representative or its successor, any change to the machine that may influence its performance, such as rated capacity, stability or security, is not allowed. Changes include brake, steering, vision or dismountable attachment. When the manufacturer or its successor approve to changes of the machine, it also needs to make corresponding modification to machine nameplate, decals, logo and brochures.

In the event the machine manufacturer is no longer in business and there is no successor in the interest to the business, the user may arrange for a modification or alteration to a powered industrial machine manufacturer and the user shall:

★Arrange for the modification or alteration to be designed, tested and implemented by an engineer(s) expert in industrial machine and their safety;

★ Maintain a permanent record of the design, test(s) and implementation of the modification or alteration;

★Approve and make appropriate changes to the capacity plate(s),decals, tags and instruction handbook;

★Affix a permanent and readily visible label to the machine stating the manner in which the machine has been modified or altered together with the date of the modification or alteration, and the name and address of the organization that made the modification or alteration.

2 Introduction of XEN series

2.1 General

This manual introduces XEN series Self-propelled elevating work platform. Users can learn about the lifting height and other relevant information from the product model.

Model	Meaning
140	Lifting height×100mm
X	Scissors arms
E	Electromotive
N	New series
S	Narrow frame

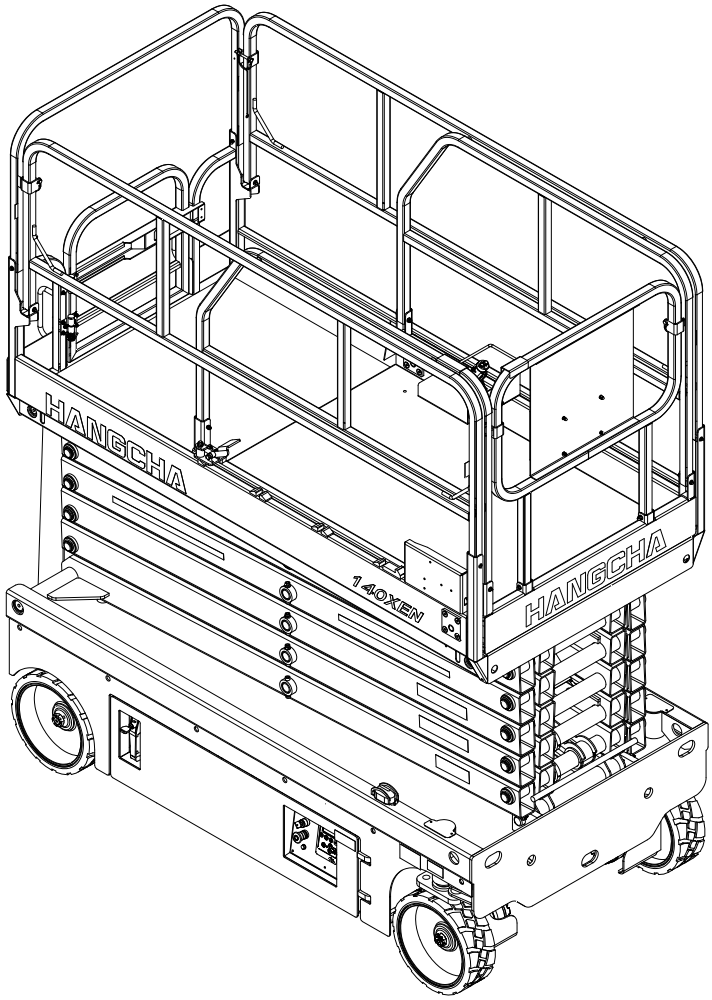

2.2 Functional description

Mechanical structure

★The frame adopts a series design, waterproof and dustproof effect is good, equipped with a transport forklift hole, easy to load, unload and transport machine; The left and right doors are designed to be rotated out for installation of hydraulic system and electrical system components, which is convenient for after-sale maintenance.

★Adopt double scissors forks structure, high stability of structure, small shaking, safe and stable lifting; There are rubber pads between the square tubes, which play a cushioning role when descending, and can prevent hand clamping to protect the safety of personnel. The maintenance arm is provided to facilitate maintenance in case of failure.

★Working platform adopts folding design, after folding the height of the machine is reduced, easy to improve the ability of passing; With one-way extension function, the maximum extension of 0.9m, in order to close to the work target, expand the scope of operation; The platform bottom plate is made of patterned steel plate, which is anti-skid and durable.

Major configuration

★Hydraulic system parts are high-end brands, stable and reliable performance, to ensure the ride comfort of the machine is equipped with emergency descend device, in the case of electrical system failure, through the device to achieve manual descend ; Equipped with a brake release device, in the machine failure can not move, can release the brake to pull the machine.

★The electrical system adopts the mainstream control system in the industry, the ground control panel and the platform control handle are equipped with emergency stop switch, in case of emergency, press the button, all actions immediately stop, to ensure the safety of operators;The control handle concentrates the function of walking, lifting and turning, and can be controlled by one hand. The proportional control is adopted to reduce the impact of movement and smooth operation.The ground control panel is equipped with a timer to show the running time of the machine. The chassis is equipped with a display screen for the display of electrical fault codes for the convenience of fault diagnosis.With a charger, charging is simple and convenient; Equipped with a full action warning system, in any action, the buzzer and warning light emit sound and light alarm.

★The battery adopts differentiated configuration, optional lead-acid battery,traction battery and lithium

battery, traction battery capacity is large, long battery life, lithium battery charging time is short and high efficiency.

Safety device

★2 meters stop device: when the platform descend to a height of 2 meters, the descending action stops, and the descending button needs to be pressed again. After the platform stops for 3 seconds, the platform continues to descend to avoid injury to people on the ground.

★Anti-overturning protection device: it opens automatically when the platform is raised to ensure that the machine will not overturn when the machine is driven into the depression.

★Oil cylinder explosion-proof device: prevent the oil pipe burst caused by the platform to automatically descend , to ensure the safety of personnel.

★Tilting alarm device: when the body tilts beyond the set range, the buzzer will give an urgent alarm sound, and the platform cannot be raised.

★Overload alarm device: according to the value detected by the height sensor and pressure sensor, when the value of the set curve is exceeded, the platform cannot be raised, and the buzzer will makes an alarm.

★Charging protection system: when charging the battery, the system will automatically cut off the whole circuit to ensure the safety of electricity use.

2.3 Main part introduction

1、Platform entrance door

2、Platform pedal

3、Control handle

4、File box

5、Extension platform

6、Safety belt anchorage

7、Fixed platform

8、Scissors arm

9、Chassis

10、Steering assembly

11、Tires

12、Batteries

13、Power switch

14、Charger

15、Anti-overturning device

16、Emergency descend handle

17、Boarding pedal

18、Brake release valve

19、Maintenance arm

20、Warning lamp

21、Control Module

22、Ground control panel

23、Limit switch

24、Level sensor

25、Inching switch

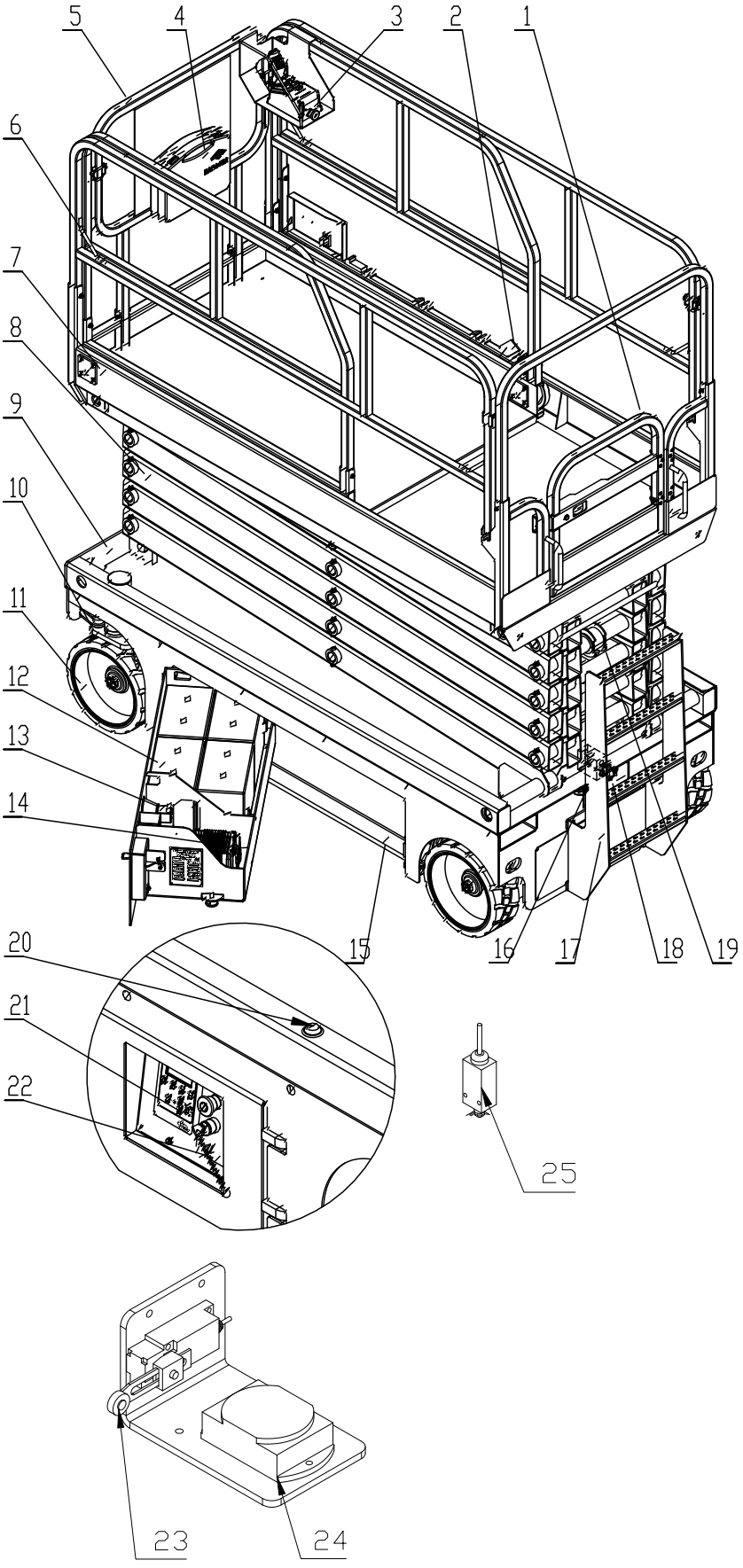

2.4 Display and control

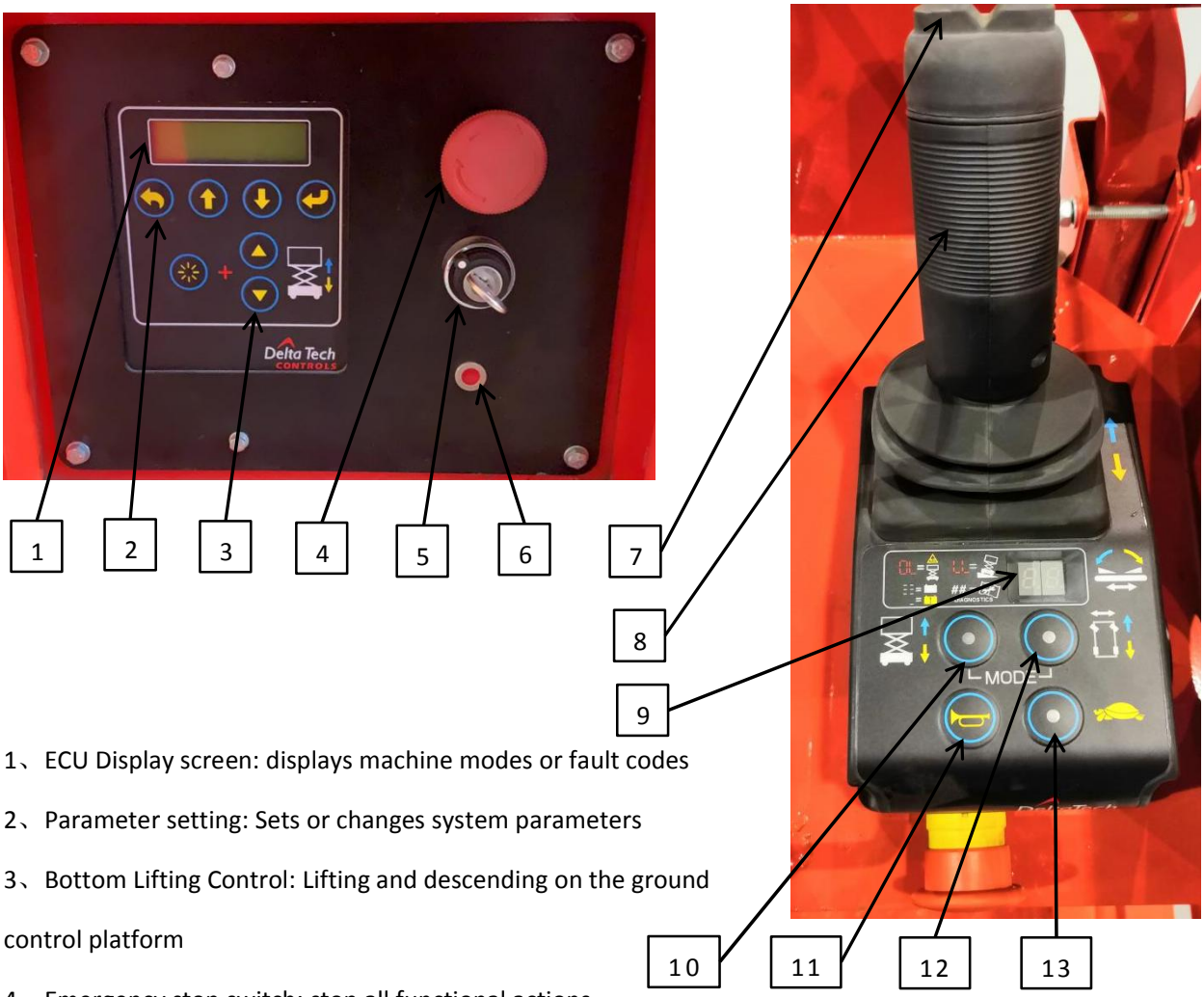

1、ECU Display screen: displays machine modes or fault codes

2、Parameter setting: Sets or changes system parameters

3、Bottom Lifting Control: Lifting and descending on the ground control platform

4、Emergency stop switch: stop all functional actions

5、Key switch: toggle ground or platform control

6、Overload indicator light: the indicator light is on when the machine is overloaded

7、Turn button: control the machine to turn left or right

8、Control handle: controls lifting, descending, forward and backward

9、PCU Display screen:Displays current power or fault code

10、Raise button: the indicator light is on to activate the raise function

11、Horn button: control horn honking

12、Drive button: the indicator light activates the drive function

13、Speed selection button: the indicator light activates slow speed

14、Enable button: Press to enable the drive or lift function



2.5 Location of labels

Signs and warning labels, such as product nameplates, warning labels, etc. must be legible and must be replaced if they are not legible.The following diagram shows the approximate location of the various signs.Please understand the symbols before you operate the machine.

1、Description of safety anchor

2、Description of rated load

3、Safety belt hook

4、Trademark

5、Model number

6、Notice head guard

7、Crushing hazard

8、Maintenance instruction

9、Tire load

10、Tire change warning

11、Battery safety warning

12、Battery change Warning

13、Power disconnection

14、Presser foot warning

15、Reflective stripe

16、Lifting hole

17、Emergency descent instruction

18、Brake release Instructions

19、Platform safety load

20、Waterproof warning

21、Operation instruction

22、Trademark

23、IPAF symbol

24、CE symbol

25、Nameplate

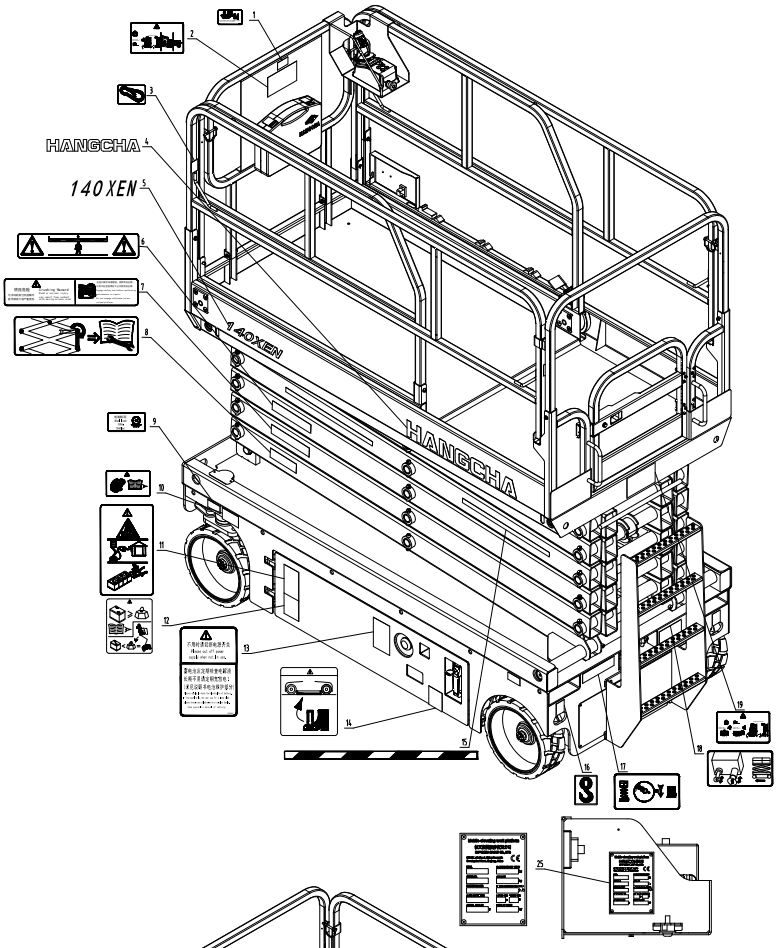

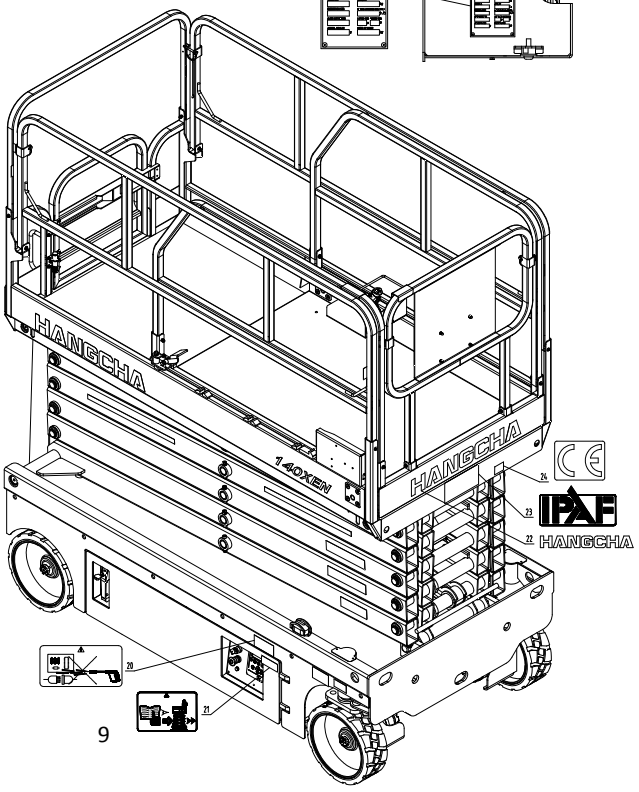

2.6 Technical parameters

The following technical data are standard data. The company reserves the right to change and supplement the data.

Parameters		unit	65XEN	78XEN
Dimension	Length	m	1.89	1.89
	Width	m	0.81	0.81
	Height (guardrail folding)	m	1.66	1.77
	Height (guardrail unfolded)	m	2.10	2.21
Ground clearance		m	0.077	0.077
Ground clearance (anti-overturning device open)		m	0.016	0.016
Machine weight		kg	1315	1435
Design dimension	Maximum platform height	m	4.50	5.80
	Maximum working height	m	6.50	7.80
	Maximum horizontal extension	m	0.90	0.90
Safe working load		kg	320	230
Extended platform safety loads		kg	113	113
Rated maximum number of workers			Indoor 2 Outdoor 1	Indoor 2 Outdoor 1
Wheel base		m	1.365	1.365
Wheel tread		m	0.71	0.71
Turning radius	Inner wheel turning radius	m	0	0
	External wheel turning radius	m	1.64	1.64
Maximum permissible lateral force		N	400N	400N
Control voltage（DC）		V	24	24
Platform dimension	Length	m	1.67	1.67
	Width	m	0.76	0.76
Tire size	Diameter	mm	305	305
	Width	mm	100	100
Hydraulic system pressure		M Pa	24	24
System voltage（DC）		V	24	24
Drive speeds	Stowed, maximum	km/h	3.5	3.5
	Platform raised, maximum	km/h	0.8	0.8
Maximum slope rating		%	25	25
Maximum wind speed		m/s	12.5	12.5
Maximum allowable inclination	forward and backward	°	3	3
	Left and right	°	1.5	1.5

Parameters		unit	80XENS	100XENS
Dimension	Length	m	2.48	2.48
	Width	m	0.81	0.81
	Height (guardrail folding)	m	1.79	1.93
	Height (guardrail unfolded)	m	2.23	2.32
Ground clearance		m	100	100
Ground clearance (anti-overturning device open)		m	20	20
Machine weight		kg	2085	2180
Design dimension	Maximum platform height	m	6.00	8.00
	Maximum working height	m	8.00	10.00
	Maximum horizontal extension	m	0.90	0.90
Safe working load		kg	380	230
Extended platform safety loads		kg	113	113
Rated maximum number of workers			Indoor 2	Indoor 2
Wheel base		m	1.86	1.86
Wheel tread		m	0.71	0.71
Turning radius	Inner wheel turning radius	m	0	0
	External wheel turning radius	m	2.1	2.1
Maximum permissible lateral force		N	400N	400N
Control voltage（DC）		V	24	24
Platform dimension	Length	m	2.27	2.27
	Width	m	0.76	0.76
Tire size	Diameter	mm	381	381
	Width	mm	127	127
Hydraulic system pressure		M Pa	24	24
System voltage（DC）		V	24	24
Drive speeds	Stowed, maximum	km/h	3.5	3.5
	Platform raised, maximum	km/h	0.8	0.8
Maximum slope rating		%	25	25
Maximum wind speed		m/s	0	0
Maximum allowable inclination	forward and backward	°	3	3
	Left and right	°	1.5	1.5

Parameters		unit	80XEN	100XEN
Dimension	Length	m	2.48	2.48
	Width	m	1.15	1.15
	Height (guardrail folding)	m	1.65	1.77
	Height (guardrail unfolded)	m	2.23	2.37
Ground clearance		m	100	100
Ground clearance (anti-overturning device open)		m	20	20
Machine weight		kg	2230	2370
Design dimension	Maximum platform height	m	6.00	8.00
	Maximum working height	m	8.00	10.00
	Maximum horizontal extension	m	0.9	0.9
Safe working load		kg	450	450
Extended platform safety loads		kg	113	113
Rated maximum number of workers			Indoor 2 Outdoor 1	Indoor 2 Outdoor 1
Wheel base		m	1.86	1.86
Wheel tread		m	1.02	1.02
Turning radius	Inner wheel turning radius	m	0	0
	External wheel turning radius	m	2.2	2.2
Maximum permissible lateral force		N	400	400
Control voltage（DC）		V	24	24
Platform dimension	Length	m	2.27	2.27
	Width	m	1.14	1.14
Tire size	Diameter	mm	381	381
	Width	mm	127	127
Hydraulic system pressure		M Pa	24	24
System voltage（DC）		V	24	24
Drive speeds	Stowed, maximum	km/h	3.5	3.5
	Platform raised, maximum	km/h	0.8	0.8
Maximum slope rating		%	25	25
Maximum wind speed		m/s	12.5	12.5
Maximum allowable inclination	forward and backward	°	3	3
	Left and right	°	1.5	1.5

Parameters		unit	120XEN	140XEN
Dimension	Length	m	2.48	2.48
	Width	m	1.15	1.15
	Height (guardrail folding)	m	1.91	2.05
	Height (guardrail unfolded)	m	2.50	2.65
Ground clearance		m	100	100
Ground clearance (anti-overturning device open)		m	20	20
Machine weight		kg	2810	3040
Design dimension	Maximum platform height	m	10.00	11.80
	Maximum working height	m	12.00	13.80
	Maximum horizontal extension	m	0.90	0.90
Safe working load		kg	320	320
Extended platform safety loads		kg	113	113
Rated maximum number of workers			Indoor 2 Outdoor 1	Indoor 2
Wheel base		m	1.86	1.86
Wheel tread		m	1.02	1.02
Turning radius	Inner wheel turning radius	m	0	0
	External wheel turning radius	m	2.2	2.2
Maximum permissible lateral force		N	400	400
Control voltage（DC）		V	24	24
Platform dimension	Length	m	2.27	2.27
	Width	m	1.14	1.14
Tire size	Diameter	mm	381	381
	Width	mm	127	127
Hydraulic system pressure		M Pa	24	24
System voltage（DC）		V	24	24
Drive speeds	Stowed, maximum	km/h	3.5	3.5
	Platform raised, maximum	km/h	0.8	0.8
Maximum slope rating		%	25	25
Maximum wind speed		m/s	12.5	0
Maximum allowable inclination	forward and backward	°	3	3
	Left and right	°	1.5	1.5

Parameters		unit	160XEN	160XENS
Dimension	Length	m	2.84	2.84
	Width	m	1.4	1.25
	Height (guardrail folding)	m	2.04	2.04
	Height (guardrail unfolded)	m	2.64	2.64
Ground clearance		m	100	100
Ground clearance (anti-overturning device open)		m	20	20
Machine weight		kg	3240	3280
Design dimension	Maximum platform height	m	13.7	13.7
	Maximum working height	m	15.7	15.7
	Maximum horizontal extension	m	0.90	0.90
Safe working load		kg	230	230
Extended platform safety loads		kg	113	113
Rated maximum number of workers			Indoor 2	Indoor 2
Wheel base		m	2.23	2.23
Wheel tread		m	1.27	1.12
Turning radius	Inner wheel turning radius	m	0	0
	External wheel turning radius	m	2.70	2.65
Maximum permissible lateral force		N	400	400
Control voltage（DC）		V	24	24
Platform dimension	Length	m	2.64	2.64
	Width	m	1.14	1.14
Tire size	Diameter	mm	381	381
	Width	mm	127	127
Hydraulic system pressure		M Pa	24	24
System voltage（DC）		V	24	24
Drive speeds	Stowed, maximum	km/h	3	3
	Platform raised, maximum	km/h	0.8	0.8
Maximum slope rating		%	25	25
Maximum wind speed		m/s	0	0
Maximum allowable inclination	forward and backward	°	3	3
	Left and right	°	1.5	1.5

3 Safety instructions

Failure to follow the instructions and safety rules in this manual will result in death or serious injury.

3.1 Hazards classification

Whether you are the owner, user or operator of the machine, you must read the manual completely and understand its contents thoroughly and correctly before the first operation. You can operate the machine independently only after you have done the whole operation from start to finish under the supervision of a qualified and experienced person. If you have any questions about the operation of the machine, please call HANGCHA Group for consultation.

The vast majority of accidents in the operation, maintenance and repair process are caused by the failure to follow basic safety operating procedures and precautions. In fact, if before each operation, can analyze safety hazards and take corresponding safety protection measures, the vast majority of accidents will be completely avoided. Therefore, before each operation, a safety officer who is professionally trained and capable of analyzing safety hazards should evaluate it. In addition, it is necessary to remind the personnel operating the machine to take necessary measures to avoid the occurrence of hazards.

3.2 Symbol Description

The symbols, color codes and txt meanings used in the product labels of Hangcha Group co., Ltd. are as follows.



Safety-warning symbol appears in most safety statements. It means your safety will be affected, so you need to pay attention and be vigilant at all times. Please read and follow the relevant information of safety warning symbols.



Indicates an emergency hazard. If not avoided, will result in death or serious injury.



Indicates a potential hazard. If not avoided, will result in death or serious injury.



Indicates a potential hazard. If not avoided, will result in minor or moderate injury.

NOTICE

Indicates potential hazard to damage the power unit, personal property and environment, or improper operation of the equipment.

3.3 Accident Notification

In case of any malfunction of machine, please contact Hangcha Group co., Ltd. Immediately. Even if there was no personal injury or property damage in the accident, please be sure to contact us by phone and provide all necessary details. If you failure to notify the manufacturer within 48 hours after the accident, the warranty period of the product maybe invalid.

NOTICE

After the accident, the operator should check the machine and its functions thoroughly. All functions should be tested first from the ground controller and then from the platform control box. Lift height shall not exceed 3m until all damage has been repaired and all controllers can be operated correctly.

3.4 Electrocution Hazard

The machine is not electrically insulated and has no electrocution protection function.

All operators and managers shall comply with national or local regulations regarding the minimum safe distance of charged conductor above ground. In the absence of such

requirement, operators and managers should follow the minimum safe distance requirement.

Electrocution Hazard

★ Follow relevant government regulations and always keep a safe distance from power cord and electrical equipment, as shown in the table below.

★Consider platform movement, wire swing or sag. Beware of strong winds or gusts, and do not operate machine during lightning or storms.

★ Keep away from the machine if it touches charged wires. Do not touch or operate the machine before the power is cut off.

★ Do not use the machine as grounded wire when welding and grinding.

Minimum Safe Distance from Charged Conductor

Voltage range （phase，kV）	Minimum safe distance m（ft）
0～50	3（10）
50～200	5（15）
200～350	6（20）
350～500	8（25）
500～750	11（35）
750～1000	14（45）

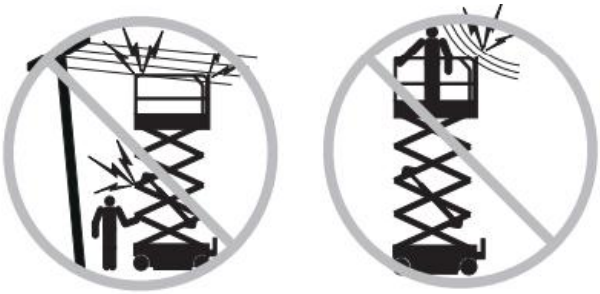

3.5 Tip-over Hazard

Maximum Rated Load Capacity

Model	Safe load capacity	Safe load capacity (Platform extension)	Person	Maximum manual operation force
65XEN	320kg	113kg	Indoor 2 person /outdoor 1 person	Indoor 400N / outdoor 200N

78XEN	230kg	113kg	Indoor 2 person /outdoor 1 person	Indoor 400N / outdoor 200N
80XENS	380kg	113kg	Indoor 2 person	Indoor 400N
100XENS	230kg	113kg	Indoor 2 person	Indoor 400N
80XEN	450kg	113kg	Indoor 2 person /outdoor 1 person	Indoor 400N / outdoor 200N
100XEN	450kg	113kg	Indoor 2 person /outdoor 1 person	Indoor 400N / outdoor 200N
120XEN	320kg	113kg	Indoor 2 person /outdoor 1 person	Indoor 400N / outdoor 200N
140XEN	320kg	113kg	Indoor 2 person	Indoor 400N
160XEN	230kg	113kg	Indoor 2 person	Indoor 400N
160XENS	230kg	113kg	Indoor 2 person	Indoor 400N



Tip-over Hazard

★ Do not allow personnel, equipment and materials on the platform to exceed the maximum load capacity.

★ Only when the machine is on firm, level ground can the platform be lifted or extended.

★ Do not use the tilt alarm as a level indicator. The tilt alarm on the platform sounded only when the machine tilted heavily. If the tilt alarm sounds, carefully lower the platform and move the machine to firm, level ground. Do not change the level or limit switch.

★ Do not drive over 0.8 km/h with the platform lifted.

★ Do not drive the machine on uneven, unstable surfaces or other dangerous conditions with the platform lifted.

★ Do not operate the machine in strong winds or gusts. Do not increase the surface area of the platform or load. Increase the area exposed to wind will decrease the stability of the machine.

★ Take special care and slow down when driving on uneven or gravelly ground, or other unstable surfaces, and near holes and steep slopes.

★ Do not drive on slopes that exceed the maximum slope rating of the machine. Maximum slope rating 25% (14°) applies to retracted platform.

★ Do not push off or pull toward any object outside of the platform.

Maximum allowable side force： Indoor 400N, outdoor 200N.

★ Do not alter any machine parts that may affect safety or stability.

★ Do not replace parts critical to machine stability with parts of different weights or specifications.

★ Do not modify or alter the aerial work platform without the prior written permission of the manufacturer.

★ Do not install additional devices to hold tools or other materials on the platform or guardrail. It will increase the weight and surface area of the platform or the load.

★ Do not place or fix any overhang load on any part of the machine.

★ Do not place ladder or scaffolding inside the platform or against any part of the machine.

★ Do not use machines on moving or mobile surfaces, or on vehicles. Ensure that all tires are in good condition and the tire nuts are properly tightened.

★ Do not push the machine or other objects with the platform.

★ Do not contact adjacent components with the platform.

★ Do not tie the platform to adjacent components with ropes or other binding materials.

★ Do not place loads outside the platform perimeter.

★ Do not use the platform controller to lower the platform when it is tripped, stuck, or blocked from normal movement by other nearby objects. If the platform is to be lowered by ground controllers, the operation must be performed only after all personnel have left the platform.

★ Do not use batteries that lighter than the original equipment. The battery not only provides power, but also acts as a counterweight, which is essential for maintaining the stability of the machine.

Application：65/78XEN、 80/100XENS. Each battery must weigh 28 kg.

80/100/120/140/160XEN、160XENS. Each battery must weigh 35 kg

★ Do not operate the machine when the left and right side doors open.

3.6 Working Environment Hazard

Before using the machine or during its operation, Inspect the workplace for possible hazards, and pay attention to environmental restrictions, including inflammable and explosive gases or dusts.



Working Environment Hazard

★ Do not operate on surfaces, edges, or potholes that cannot support the machine. Only when the machine is on firm, level ground can the platform be lifted or extended.

★ Do not use the tilt alarm as a level indicator. The tilt alarm on the platform sounded only when the machine tilted heavily.

★ If the tilt alarm sounds, carefully lower the platform. Do not change the level or limit switch.

★ Do not drive over 0.8 km/h with the platform lifted.

★ Do not operate the machine outdoors when there is strong winds or gusts. Do not lift the platform when the wind speed exceeds 12.5m/s. If the wind speed exceeds 12.5m/s after lifting the platform, immediately retract the platform and stop the operation.

★ Do not drive on uneven terrain, unstable surfaces, or other dangerous conditions with lifted platform.

★ Take special care and slow down when driving the machine with retracted platform on uneven or gravelly ground, or other unstable surfaces, and near holes and steep slopes.

★ Do not drive or lift the machine on slopes, steps, or arched ground that exceed its maximum slope rating.

Beaufort scale	m/s	mile/h	Description	Ground conditions
0	0～0.2	0～0.5	Clam	No wind, smoke vertically up.
1	0.3～1.5	1～3	Light breeze	Smoke indicates wind direction.
2	1.6～3.3	4～7	Light breeze	Bare skin feels windy. Leaves rustle slightly.
3	3.4～5.4	8～12	Gentle breeze	Twig began to shake.

4	5.5～7.9	13～18	Moderate breeze	Dust and scraps of paper kicked up and twigs began to shake.
5	8.0～10.7	19～24	Fresh breeze	Saplings shook.
6	10.8～13.8	25～31	Strong breeze	Swaying branches, whistling overhead power lines, and difficult to open an
7	13.9～17.1	32～38	Near gale	Tree shakes. Difficulty walking against the wind.
8	17.2～20.7	39～46	Gale	Broken branches. Vehicle offset direction.
9	20.8～24.4	47～54	Strong gale	Minor damage to the building.

NOTICE

Maximum slope rating 25%. Maximum slope rating applies to machines in the retracted position.

Climbing capacity refers to the maximum slope rating when the machine is on firm ground and the platform is carrying only one person. The rating of the ramp decreases as the platform increases in weight.

3.7 Unsafe Operation Hazard

The operation shall strictly comply with the requirements of this manual and maintenance manual. If the industry or local has more stringent regulations, the latter shall be followed.



Unsafe Operation Hazard

★ Do not push or pull any object outside of the platform.

Maximum allowable side force： Indoor 400N, outdoor 200N.

★ Do not alter any machine parts that may affect safety or stability.

★ Do not replace parts critical to machine stability with parts of different weights or specifications.

★ Do not modify or alter the aerial work platform without the prior written permission of the manufacturer.

★ Do not install additional devices to hold tools or other materials on the platform or guardrail. It will increase the weight and surface area of the platform or the load.

★ Do not place ladder or scaffolding inside the platform or against any part of the machine.

★ Do not operate machine on moving or mobile surfaces, or on vehicles. Ensure that all tires are in good condition and the tire nuts are properly tightened.

★ Do not place or fix any overhang load on any part of the machine.

★ Do not use the machine as a crane.

★ Do not push the machine or other objects with the platform.

★ Do not contact or tie adjacent components with the platform.

★ Do not place loads outside the platform perimeter.

★ Do not operate the platform controller to lower the platform when it is tripped, stuck, or blocked from normal movement by other nearby objects. If the platform is to be lowered by ground controllers, the operation must be performed only after all personnel have left the platform.

★ When one or more tires are off the ground, evacuate all personnel before stabilizing the machine, and use crane, forklift, or other suitable equipment to stabilize the machine.

3.8 Fall Hazard

The operation of the machine shall strictly comply with the requirements of this manual and maintenance manual. If the industry or local has more stringent regulations, the latter shall be followed.



Fall Hazard

★Wear seat belts or use safety facilities in accordance with government regulations. Attach the lanyard to the anchor on the platform, and only one person can tie on an anchor.

★ Do not sit, stand or climb on the platform guard rails. Maintain a firm footing on the platform floor at all times.

★ Do not climb down from the platform when lifted.

★ Keep the platform floor unobstructed.

★ Do not enter or exit the platform unless the machine is fully retracted.

★ Close the entrance door before operation.

★ Do not operate the machine unless the guard rails are properly installed and the entry is secured.

3.9 Collision Hazard

The operation of the machine shall strictly comply with the requirements of this manual and maintenance manual. If the industry or local has more stringent regulations, the latter shall be followed.



Collision Hazard

★ Be careful about limited sight distance and blind spots when driving or operating.

★ Check the work area for overhead obstacles or other possible hazards.

★ Be careful when using the platform control box and ground controller. Color-coded directional arrows indicate drive, lift, and steering functions.

★ Comply with employer, job site and governmental rules regarding the use of personal protective equipment (hard hats, seat belts, gloves, etc.)

★ The machine must be on level surface or secured before releasing the brake.

★ Only lower the platform when there are no people or obstacles in the area below.

★ Limit the drive speed according to the condition and slope of the ground, the degree of congestion, the location of the personnel and any other factors that may cause a collision.

★ Do not operate machine in the path of any crane or moving overhead machinery unless the crane controller is locked or precautions have been taken to prevent any potential collision.

★ Do not place your hands and arms near where they may be squeezed.

★ Do not work under the platform or in the scissor arms without the safety bar in place.

★ Please maintain correct judgment and planning when operating the machine with the controller on the ground and keep a proper distance between the operator, the machine and the fixed object.

★ No dangerous driving or horseplay when operating machine.

3.10 Crushing Hazard

There is a potential crushing hazard when moving the machine. Body parts and clothing should be kept at a safe distance from the machine at all times during operation.



Crushing Hazard

★ Do not place your hands and arms near where they may be squeezed.

★ Do not work under the platform or in the scissor arms without the safety bar in place.

★ Please maintain correct judgment and planning when operating the machine with the controller on the ground and keep a proper distance between the operator, the machine and the fixed object.

3.11 Explosion and Fire Hazard



Explosion and Fire Hazard

★ Do not charge the battery, operate or fuel the machine in places that are dangerous or where flammable and explosive gases may exist.

3.12 Damaged Machine Hazard

Comply with the operation and maintenance requirements of the parts in this manual and the maintenance manual, otherwise the machine may be damaged.



Damaged Machine Hazard

★ Do not use damaged or malfunctioning machines.

★ Conduct a thorough pre-operation inspection of the machine and test all functions before each work shift. Damaged or faulty machines should stop work and be marked immediately.

★ Ensure that all maintenance operations have been performed according to this manual and related maintenance manual.

★ Ensure that all labels are properly positioned and easily identifiable.

★ Ensure that the operation and maintenance manual are complete, legible and kept in the storage container located on the platform.

3.13 Bodily Injury Hazard

Comply with the operation and maintenance requirements in this manual and the maintenance manual, otherwise the machine may be damaged.



★ Hazards of unsafe and improper operation.

★ Do not operate the machine with a hydraulic oil leak. Hydraulic oil leak can penetrate or burn skin.

3.14 Battery Hazard



★ The battery contains sulfuric acid and can produce an explosive mixture of hydrogen and oxygen. Any device that can cause sparks or flames (including cigarettes/smoke materials) should be kept away from the battery to prevent explosion.

★ Do not contact the battery terminals or the cable clamps with tools that may cause sparks.

★ Always wear protective clothing and goggleswhen working with batteries. Remove all rings, watches and other jewelry.

★ Avoid spilling or contacting battery acid. Neutralize battery acid spills with baking soda and water. If battery acid comes into contact with skin, rinse immediately with plenty of water and seek medical attention immediately.

★ Lift the battery according to the instructions.

★ Use the charger specified by the manufacturer to charge the battery.

★ Only connect the charger to a grounded two-phase AC power outlet.

★ Inspect daily for damaged cables, please replace the damaged items before operation.

3.15 Hydraulic System Hazard



★ Do not touch the hydraulic system when it is at high temperature. Hot hydraulic oil can cause serious injury.

★ Thoroughly clean the spilled hydraulic oil after the equipment stops working. Do not spill hydraulic oil on the ground. Wash any hydraulic oil off the skin as soon as maintenance and repair are completed. Dispose of used hydraulic oil according to legal regulations.

★ Do not plug the leaking hydraulic oil by hand. If leakage occurs, the system pressure should be released first, and the hydraulic oil should be cooled before maintenance. Injuries caused by ignoring the dangers of hydraulic oil require immediate medical attention. Serious complications may occur if immediate treatment is not performed.

3.16 Weldment and Grinding Safety

Before performing welding, grinding and polishing operations, the welder must obtain permission from the responsible department at the workplace.



★ Follow welder manufacturer's recommendations for proper use of welder procedures.

★ Only after the power is turned off can connect the wire or cable for welding or grinding operations.

★ Only after the wire or cable is properly connected can welding and grinding be carried out.

★ Do not use the machine as ground wire during welding operations.

★ Ensure that power tools are fully stored in the working platform at all times. Do not hang its wires on the guardrail of the work platform and the work area outside the platform, or hang power tools directly with the wires.

3.17 Lockout after Each Use

1. Select a safe parking location—firm level surface, clear of obstruction and traffic.
2. Ensure that the scissors are lowered to the lowest position and that all panels and doors are closed and secured.
3. Before shutting down or not using for a long time, the hydraulic cylinder is forbidden to be in a fully extended state.
4. Press the emergency stop button of the platform controls to the off position.
5. Press the emergency stop button of the chassis controls to the off position.
6. Turn the key switch to the off position and remove the key to secure from unauthorized use.
7. Turn off power-off switch.
8. Charge the batteries.

NOTICE
The power-off switch must be turned off after each use.

4 Lifting, Fixation and Traction

4.1 Lifting

Confirmation before lifting:

★The transport machine must be parked on a level ground and must be fixed to prevent rolling.

★Make sure the platform is descended to the lowest position, the extension platform is retracted and the doors on the chassis are closed.

★Remove all loose parts from the machine.

★Folding the guardrail to prevent the guardrail falling. When folding the guardrail should always grasp the guardrail after folding the guardrail is fixed and stable, to prevent the free jumping in the process of lifting.

★Make sure the machine has sufficient loading surface straps or ropes to support the weight of the machine(Please refer to the specification and parameters section of this manual).

★When using a forklift or crane to lift the machine, use good judgment and plan to control the movement of the machine.

Crane lifting

★Only the rigging can be connected to the specified lifting point on the machine

★Adjust rigging according to machine center of gravity position to avoid damage to machine and keep machine level.

Fork lifting

★Use forklift slots on both sides of the ladder

★Align the forklift fork to the position with the forklift notch.

★Drive forward until the fork is fully inserted.

★Lift the machine by 0.4m, then tilt the fork back slightly to keep the machine in place

★Ensure machine level when descending forks.

4.2 Fixation

The machine must be properly secured when transporting by truck or trailer to prevent accidental movement.

★Make sure the platform is descended to the lowest position, the extension platform is retracted and the doors on the chassis are closed.

★Wedge the wheels before transport to prevent the machine from rolling.

★Before transportation, turn the key switch to the off position, and then remove the key.

★Inspect the machine thoroughly to prevent loose or unsecured parts.

★The machine is fixed to the transport machine through the fixing holes in the chassis.

★Use at least 4 chains or belts.

★Ensure that the chain or belt has sufficient load strength.

★Adjust the lock to prevent damage to the chain.

4.3 Traction

It’s not allowed to tow the machine on the ground directly when the machine is broken down or damaged since the brake of the machine is closed under normal circumstances. Appropriate machine should be used to remove the broken machine.

Before pulling the machine, the brake should be released. It is strictly forbidden to move or pull the damaged machine directly on the ground, otherwise the brake system of the machine will be damaged.

★The machine must be on a level or in place before releasing the brake.

★Wedge the wheel to keep the machine from rolling.

★Locate the manual release brake valve located behind the chassis.

★Push the black hydraulic break handle to cut off the return oil circuit.

★Repeatedly push and pull the red brake to release the manual pump handle until the pressure increases to push difficulty.

★It passes through the traction hole at the front end of the chassis through the rigging, and is connected and fixed with the traction machine or tools.

★Traction the damaged machine to the designated repair place.

★To reset the brake, simply pull out the black hydraulic circuit breaker handle.

5 Pre-operation inspection

5.1 Machine inspection

In order for the safety machine operation and keep the machine in good condition, before starting the machine, you must check it carefully.

Fundamentals

★Performing pre-operation inspections and routine maintenance is the operator's responsibility.

★The pre-operation inspection is a very intuitive inspection process, which is performed by the operator before each change of work. The purpose of the inspection is to find out if there is an obvious problem with the machine before the operator performs function test.

★The pre-operation inspection may also be used to determine whether routine maintenance procedures are required. The operator can only perform routine maintenance items specified in this manual.

★Refer to the list of machines and parts and check each item and position for any changes, breakage, looseness or missing parts.

★If a damaged or altered machine is found to be damaged or any change from the factory condition, the machine should be marked and discontinued.

★Machine after maintenance, before performing function test, the operator must perform a pre-operation inspection for use.

★Periodic maintenance inspections shall be performed by qualified maintenance technicians in accordance with the manufacturer's regulations and the requirements listed in the duty manual.

Check components

★Ensure operation manuals are in good condition, easy to read and stored in the file box on the platform.

★Please refer to the Labels section to ensure that all labels are legible and properly placed.

★Check whether the hydraulic oil is leaking and whether the liquid level is appropriate. Please add oil as needed.

★Check whether the battery fluid leaks and whether the liquid level is appropriate. Add distilled water as required.

★Inspect the following parts or areas for damage, improper loosening or missing parts, and unauthorized

changes:

——Electrical components, wiring and cables

——Hydraulic power unit ,tank, connector, hose, hydraulic cylinder and valve block

——Batteries and their connections

——Drive motor and brake device

——Brake release valve

——Tires

——Maintenance arm

——Limit switches and horn

——Buzzer and warning light

——Platform entrance gate

——Anti-overturning device

——Platform extension

——Control handle

——Scissor pins and retaining fasteners

——Nuts, bolts and other fasteners

★Check the machine:

——Whether there are cracks in welds or structural parts.

——Is there any dent or damage on the outside surface of the machine.

——Whether there is serious rust corrosion or oxidation phenomenon.

——Ensure that all structural and other critical components are complete and that all relevant fasteners and pins are in correct position and fully tightened.

5.2 Operating environment inspection

Operating environment inspection helps the operator determine whether the workplace is suitable for safe operation of the machine. This inspection should be performed by the operator before moving the machine to the workplace.

It is the operator's responsibility to understand and remember workplace hazards, and then to be aware of and avoid these problems when moving, installing and operating machines.

Beware and avoid the following dangerous situations:

★A steep slope or cave.

★A ground obstruction or debris.

★Inclined surface.

★Infirm or smooth surface.

★Aerial obstacles and power lines.

★hazardous location.

★Surface supports insufficient to support the full load applied by the machine.

★Gusty and strong wind conditions.

★The presence of unauthorized personnel.

★Other possible unsafe conditions.

6 Function Tests

Fundamentals

★The purpose of function test is to find out whether there are functional defects or malfunctions before starting to use the machine. The operator must test all the functions of the machine step by step according to the instructions.

★If a fault is found, the machine must be marked and discontinued. According to the manufacturer's regulations, only qualified maintenance technicians can repair the machine.

★After maintenance, the operator must perform a pre-operation inspection and functional test again before starting to use the machine.

Test preparation

★Choose a solid level test area with no obstacles.

★Make sure the batteries is connected.

★Turn on the main power switch.

6.1 For ground control panel

1、Pull out the red emergency stop switch on the platform and ground to the ON position.

2、Turn key switch to ground control position.

Result: The correlation indicator lights up and does not display any error messages.

Test emergency stop

1、Press the red emergency stop switch on the ground to the OFF position

Result: All functions are off.

2、Pull out the red emergency stop switch to the ON position.

Test raise and descend

1、Activate raise function.

Result: The platform should raise.

2、Activate descend function.

Result: The platform should descend and the alarm should sound

6.2 For platform control panel

Turn key switch to ground control position.

Result: The correlation indicator lights up and does not display any error messages.

Test emergency stop

1、Turn key switch to platform control position.

2、Press the red emergency stop switch on the ground to the OFF position

Result: All functions are off.

3、Pull out the red emergency stop switch to the ON position.

Test horn

1、Push the horn button

Result: The horn should sound

Test enable switch

1、Do not hold the function enable switch on the control handle. Move the control handle in the direction of the arrow.

Result: No functions should operate.

Test raise and descend

1、Press the raise function select button,The button lights up.

2、Move the control handle slowly forward in the direction indicated by the arrow.

Result: The platform should raise.

3、Release the control handle.

Result: The platform should stop raising.

4、Move the control handle slowly backward.

Result: The platform should be descended and alarm should sound

Test steering

1、Press the drive function select button, The button lights up.

2、Press and hold the enable button and left turn button on the control handle simultaneously

Result:The wheel to Turn the left.

3、Press and hold the enable button and right turn button on the control handle simultaneously

Result:The wheel to Turn the right.

Test drive and braking

1、Press the drive button, the button will light up.

2、Push the proportional control handle forward slowly in the direction indicated by the arrow on the control panel until the machine begins to move, then return the handle to the center position.

Result: The machine should move forward and then stop.

3、Push the proportional control handle backward slowly in the direction indicated by the arrow on the control panel until the machine begins to move, then return the handle to the center position.

Result: The machine should move backwards and then stop.

NOTICE The brakes must be able to stop the machine on any slope it can climb.

Test limited drive speed limit

1、Press the raise button and the button lights up.

2、Raise platform about 2m until anti-roll is deployed

Result: Anti-overturning device should be developed.

3、Press the drive button and slowly move the drive control handle to the maximum position.

Result: The speed at which the machine will move will be no less than 45 seconds for 10m.

If NOTICE the machine travels for 10m less than 45s, it should be immediately stopped and marked, and the maintenance personnel should check or modify the parameters.

6.3 For platform control panel

Test emergency descend



1、Activate the raise function and

2、Pull out the emergency descend handle .

Result: The platform should be descended and the platform stops descend after the handle is released. The alarm will not sound when the platform is down.

Test brake release

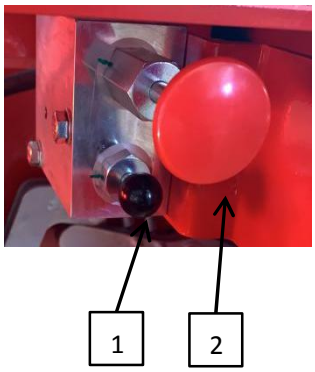

The brake release valve is installed at the rear of the frame.

1、Press the black reverse valve (1) .

2、Push the red manual pump (2) repeatedly to remove the brake.

3、Reset the reverse valve (1) after the test is completed.

Test tilt sensor

NOTICE Use the platform handle to control the device on the ground, do not stand inside the platform.

1、Descend platform safely.

2、Apply to 65XEN、78XEN、80XENS、100XENS：

Place two wooden blocks 25mm high and 120mm wide on the left (or right) side of the machine under the two wheels and drive the machine onto the two boards.

Apply to 80XEN、100XEN、120XEN、140XEN：

Place two wooden blocks 35mm high and 150mm wide on the left (or right) side of the machine under the two wheels and drive the machine onto the two boards.

Apply to 160XEN、160XENS：

Place two wooden blocks 40mm high and 150mm wide on the left (or right) side of the machine under the two wheels and drive the machine onto the two boards.

3、Convert the walking function into the platform lifting function. Press the handle to raise the platform about 2m.

Results: The platform should stop moving and tilt the alarm bell at the same time. The platform and the ground display screen should display LL.

4、Descend platform, convert to drive function, remove working platform, remove wood block.

5、Apply to 65XEN、78XEN：

Place two wooden blocks 45mm high and 120mm wide under two wheels in the front (or rear) of the machine, and drive the two wheels of the machine onto the two boards.

Apply to 80XENS、100XENS、80XEN、100XEN、120XEN、140XEN：

Place two wooden blocks 100mm high and 150mm wide under two wheels in the front (or rear) of the machine, and drive the two wheels of the machine onto the two boards.

Apply to 160XEN、160XENS：

Place two wooden blocks 120mm high and 150mm wide under two wheels in the front (or rear) of the machine, and drive the two wheels of the machine onto the two boards.

6、Convert the walking function into the platform lifting function. Press the handle to raise the platform about 2m.

Results: The platform should stop moving and tilt the alarm bell at the same time. The platform and the ground display screen should display LL.

7、Descend platform, convert to walking function, remove working platform, remove wood block.

Test anti-overturning device

NOTICE When the platform is raised, the anti-overturning device shall be automatically deployed. The anti-overturning device shall start two Inching switches to restrict the movement of the machine. When the platform is raised to the fork seat and leaves the pressure bar of the anti-overturning device, if the device is not deployed, the alarm will sound and the machine cannot rise or drive.

1、Raise the platform

Result: When the platform is raised to the machine leaves the pressure bar,the anti-overturning device should deploy.

2、Press on the anti-overturning plate on one side, and then the other.

Result: The anti-overturning plate should not move

3、Descend the platform.

The anti-overturning device should return to the stowed position.

4、Place a piece of wood 50mm high and 50x100mm wide under the protective plate of the anti-tipping device and raise the platform.

Result: When the platform raise to about 2m above the ground, the alarm will sound and the platform and ground control panel display will show 18.The machine cannot raise or drive.

Descend the platform and remove the blocks.

7 Operating instructions

Fundamental principle

★The operation instructions section provides specific instructions for all aspects of machine operation. It is the operator's responsibility to follow all safety rules and instructions in the operation manual.

★It is not safe or even dangerous to use the machine for purposes other than the promotion of personnel and tools to the air workplace. Only trained and authorized personnel are allowed to operate the machine.

★If with different time of work shift, with more than one operator to use machines, so they must be qualified operators and follow all safety rules and guidance on the operation manual This means that each new operator before using the machine, should be to check the workplace inspection and functional test before operation.

7.1 Emergency operation

Emergency stop

★Press the red emergency stop switch of the ground control panel or the platform control handle inward to the OFF position, and all functions will stop.

★To restore any operation function, pull out the emergency stop switch and go to the ON position and execute after the power switch is in the ON position

Emergency descend

★Pull out the emergency descend handle

Brake release

★Press the black reversing valve.

★Push the red manual pump repeatedly to remove the brake.

7.2 Operate from the ground

★Turn key switch to ground control

★Pull the red emergency stop switch out to the ON position

Raise and descend

Press the raise/descend button according to the sign on the control panel.

NOTICE Drive function are not available through the ground control panel.

7.3 Operate from the platform

★Turn key switch to platform control position.

★Pull out the emergency stop switch on the ground and the platform to the ON position.

★Operators must be equipped with seat belts as required and attached to the seat belts on the platform.

Raise and descend

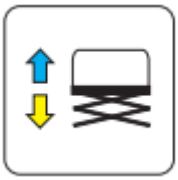

1、Press the raise/descend button and the button lights up.

2、Press and hold the enable button on the control handle.

3、Pull the handle according to the raise/descend sign on the control panel.

Steering



1、Press the drive button and the button lights up.

2、Press the enable button on the control handle.

3、Turn the steering wheel with the thumb rocker switch at the top of the control handle.

NOTICE Use the color-coded direction arrow on the platform control handle to determine the direction of wheel rotation.

Drive

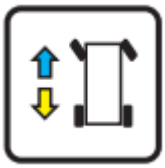

1、Press the drive button and the button lights up.

2、Press the enable button on the control handle.

3、Increase speed: Slowly pull the handle off-center.

4、Reduce speed: slow anti-loose control handle to center position.

5、Stop: Return the control handle to the center position or release the enable button.

Use the color-coded direction arrow on the platform control handle to determine the direction the machine is going.

When the platform was raised to a height of two meters, the speed of movement of the machine was limited.

NOTICE The state of the battery will affect the performance of the machine. When the platform display indicates that the power is low, the driving speed and lifting speed of the machine will decrease.

Select drive speed

In the retraction position, the drive controller can operate in two different driving speed modes. When the light of the low speed button is on, the low speed driving speed mode is activated. If the light is not on, the speed mode is activated by default.



NOTICE When the platform is raised until the anti-overturning device is opened, the low speed walking button light is always on to indicate that the driving speed is low.

Display of battery capacity

Check the battery level through the LED display on the platform control handle.

Description of battery capacity:

Handle Power Display	Power ratio	Description
6 grids	90-100%	The battery is full
5 grids	70%	battery capacity 70%
4 grids	50%	battery capacity 50%
3 grids	30%	battery capacity 30%
2 grids	20%	The battery must be recharged immediately
1 grid	10%	Battery power is low and action stops

7.4 Extend and fold the platform

Extend the platform

1、Step on the pedal

2、Grasp and carefully push the extension platform guardrail so that the extension platform extends out.

NOTICE When extending the platform, do not stand on the extension part of the platform. The extension platform can be positioned at three slots. Do not stand on the extension platform when the

extension platform is not fixed.

Set up and fold the platform guardrail

Platform guardrails can be folded for easy transportation and are propped up when in use.The platform guardrail system consists of a folding guardrail section of an extended platform and a folding guardrail section of a fixed platform.All parts are held in place by a number of D-latches.

1、Descend the platform completely and retract the extended platform.

2、Remove platform control handle.

3、Pull out the D-latches, fold the extension platform before the guardrail, fold the extension platform on both sides of the guardrail.

4、Carefully open the door and move to a ladder or floor.

5、Pull out the D-latches and fold the guardrail on both sides of the platform.

6、Fold the door and the rear guardrail as a whole.

When using the platform, set up the platform guardrail in reverse order. When setting up the guardrail on each side, insert the D-bolt and lock it to ensure accurate installation.

NOTICE When folding or setting up a guardrail, do not place your hands in a position where they may be clipped by the guardrail.

7.5 Use of maintenance arm

Before performing any maintenance or repair on the machine, hold up all the maintenance arms and make sure there is no load on the platform before using the maintenance arms.

1、Operate the ground control panel. The distance between the upper and lower shearing fork sleeve is greater than the length of the maintenance arms.

2、Lift the maintenance arms, move it to the middle of the shearing fork sleeve, and rotate it upward to the vertical position.

3、Lift the maintenance arms, move it to the middle of the shearing fork sleeve, and rotate it downward to the vertical position (for models equipped with two maintenance arms)

4、Descend the height of the platform until the shearing fork sleeve is in complete contact with the maintenance arms.

7.6 Batteries and Charger

★Do not use external chargers or booster charger.

★Charge the battery in a well-ventilated environment.

★Charge using the correct input voltage as indicated on the label.

★Only batteries and chargers approved by HANGCHA Group can be used

Charge a battery (lead acid battery)

1、Make sure the battery is connected before charging.

2、Open the battery side door and keep it open during the charging process.

3、Remove the ventilation cover of the battery, check the acid liquid level of the battery. if it is necessary to supplement, add distilled water through the liquid port of the upper part of the battery, add to the distilled water enough to cover the plate, do not add too much.

4、Install the battery ventilation cover.

5、Connect the battery charger to the grounded AC circuit.

6、The charger will give a prompt when the battery is full.

7、Check the acid level of the battery at the end of the charging cycle if it is necessary to supplement, add distilled water through the liquid port on the upper part of the battery, do not add excessive.

Charge the battery (maintenance-free battery or lithium battery)

1、Make sure the battery is connected before charging.

2、Open the battery side door and keep it open during the charging process.

3、Connect the battery charger to the grounded AC circuit.

4、The charger will give a prompt when the battery is full.

8 Maintenance

Refer to the maintenance manual before maintenance contents and methods

8.1 Maintenance instruction

★The machine needs regular inspection and maintenance to keep it in good condition.

★Inspection and maintenance are often overlooked. Problems are found as early as possible and resolved in time.

★Use spare parts provided or approved by HANGCHA Group.

★When replacing or refueling, do not use different types of oil to replace the waste oil liquid waste battery can not be dumped and discarded, should be treated in accordance with the relevant local laws and regulations.

★Make a comprehensive maintenance plan.

★Complete records shall be made after each maintenance.

★Only trained and qualified personnel are allowed to repair the machine.

★Unless otherwise specified, perform maintenance procedures in accordance with the following terms and conditions:

1.The machine is placed on flat level ground.

2.The machine is at rest.

3.Turn the key switch to the OFF position and take out the key, cut off power of the machine.

8.2 Maintenance schedule

There are five types of maintenance that must be performed according to the schedule: daily, quarterly, six-month, yearly and biennial. They are defined as follows:

Maintenance program	Interval time
A	Every 8 hours of operation (or daily)
A+B	Every 250 hours of operation (or quarter)
A+B+C	Every 500 hours of operation (or every six months)
A+B+C+D	For every 1000 hours of operation (or per year)

8.3 Maintenance inspection report

Select the appropriate checklist according to the maintenance inspection items, use one form for each inspection, and keep the completed form for more than three years.Record the inspection results.

If any of the inspection results is not passed, the platform must be stopped using, and the platform must be re-inspected after maintenance and marked as passed after repair.

Maintenance Inspection Report A			
Item	**Qualified**	**Unqualified**	**Qualified after repair**
A-1 Check manual			
A-2 Check labels			
A-3 Checking components			
A-4 Check hydraulic oil			
A-5 Check battery power			
A-6 Check the function			
A-7 Check emergency lowering			
A-8 Check the brake			
A-9 Check tilt protection system			
A-10 Check the pothole guard system			
A-11 Check limit switch			
A-12 Test lift/down time			
A-13 Test drive speed			
A-14 Test overload device (optional)			
A-15 Perform 30 days maintenance			

Maintenance Inspection Report B			
Item	**Qualified**	**Unqualified**	**Qualified after repair**
B-1 Check wires			
B-2 Check wheels and tires			
B-3 Check the battery			

B-4 Check hydraulic oil			
B-5 Check hydraulic oil tank			
B-6 Check manual brake release function			

Maintenance Inspection Report C			
Item	**Qualified**	**Unqualified**	**Qualified after repair**
C-1 Replace air filter			

Maintenance Inspection Report D			
Item	**Qualified**	**Unqualified**	**Qualified after repair**
D-1 Replace return oil filter			
D-2 Replace hydraulic oil			
D-3 Check bushings and slides			
D-4 Check critical structural parts			

HANGCHA GROUP CO., LTD.

■ Address: 666 Xiangfu Road, Hangzhou, Zhejiang, China
■ Fax: 0086-571-88926789 0086-571-88132890 ■ ZIP：311305
■ Web：http://www.hcforklift.com ■ E-mail：sales@hcforklift.com